LES2X13NB



Two adjustable 13W LED floodlights. Equivalent to 2x75W BR30/halogen/wide floods. Diffusion lens optimizes light output without glare.

Color: Black Weight: 5.0 lbs

Project:	Type:
Prepared By:	Date:

Driver Info

Type:	Constant Current
120V:	0.22A
208V:	N/A
240V:	N/A
277V:	N/A
Input Watts:	26W
Efficiency:	N/A

LED Info

Watts:	26W
Color Temp:	4000K
Color Accuracy:	83 CRI
L70 Lifespan:	60000
Lumens:	2276
Efficacy:	87 LPW

Technical Specifications

Listings

UL Listing:

Suitable for wet locations. Suitable for mounting within 4 feet of the ground.

IESNA LM-79 & LM-80 Testing:

RAB LED luminaires have been tested by an independent laboratory in accordance with IESNA LM-79 and LM-80, and have received the Department of Energy "Lighting Facts" label.

Electrical

Driver:

120V driver, 50/60/ Hz, 0.22A, 228mA

THD:

12% at 120V

Power Factor:

99.3% at 120V

Optical

NEMA Type:

6H x 6V Beam Spread

Construction

Cold Weather Starting:

Minimum starting temperature is -40°C (-40°F)

Maximum Ambient Temperature:

SuitableFor use in 40°C (104°F) ambient temperatures

Housing:

Precision die-cast aluminum housing, lens frame and mounting arm

Reflector:

Vacuum-metalized polycarbonate

Lens:

Diffused glass for smooth, even light distribution

Mounting:

Pre-Assembled and wired for easy mounting EZ Hang hook. Compatible with round and rectangular surface mount boxes as well as recessed boxes.

Gaskets:

High-temperature silicone gaskets

Finish:

Our environmentally friendly polyester powder coatings are formulated for high-durability and long-lasting color, and contain no VOC or toxic heavy metals.

Green Technology:

Mercury and UV free. RoHS compliant components. Polyester powder coat finish formulated without the use of VOC or toxic heavy metals.

LED Characteristics

LEDs:

Long-life, high-efficiency surface mounting LEDs

Color Uniformity:

RAB's range of CCT (Correlated Color Temperature) follows the guidelines of the American National Standard for Specifications for the Chromaticity of Solid State Lighting (SSL) Products, ANSI C78.377-2015.

Other

Equivalency:

Equivalent to 2x75W halogen BR30 wide flood.

5 Yr Limited Warranty:

Fixture operation and paint finish are covered for a period of 5 years.

Buy American Act Compliance:

RAB values USA manufacturing! Upon request, RAB may be able to manufacture this product to be compliant with the Buy American Act (BAA). Please contact customer service to request a quote for the product to be made BAA compliant.

Copyright © 2014 RAB Lighting Inc. All Rights Reserved Note: Specifications are subject to change at any time without notice

LES2X13NB

Dimensions

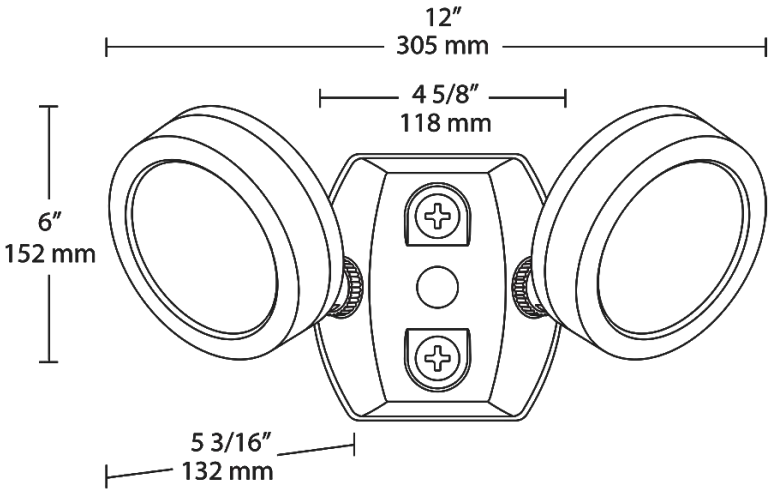

Features

- Equivalent to two 75W halogen BR30 wide floods
- 6H x 6V beam distribution delivers ample light
- Diffused lens for smooth, even light distribution
- Adjustable knuckle
- 60,000-Hour LED lifespan

Ordering Matrix

Family	Wattage	Color Temp	Finish
LES	2X13	N	B
	2x13 = 2 x 13W	**Blank** = 5000K (Cool) **N** = 4000K (Neutral) **Y** = 3000K (Warm)	**Blank** = Bronze **W** = White **B** = Black **VG** = Verde Green

Copyright © 2014 RAB Lighting Inc. All Rights Reserved Note: Specifications are subject to change at any time without notice