PLC-9-H-835-BYP

Project:	Type:	Prepared By:	Date:



UPC: 19813751528

Features and Benefits

BALLAST BYPASS - Reduces maintenance costs

REPLACE - Conventional fluorescent lamps

Approximately 40% more energy efficient than conventional pin-based CFLs with a G24q base

INSTANT ON - No flicker or hum

111+ lm/W

MERCURY FREE - Environmentally friendly vs fluorescent technologies

Technical Specifications

Product Type	Compact
Bulb Shape	PLC
Finish	Frosted
Wattage	9W
Wattage Equivalency	26W Fluorescent
Typical Lumen Output	950
Efficacy	106 lm/W
Color Temperature	3500K Neutral White
CRI	82
Base Type	G24d
L70 Lifespan	50,000 hours
Operating Temperature	-20°C - 45°C
Dimmable	No
Warranty	5-Year, No-Compromise Warranty
Installation Type	Type B, Ballast Bypass
Installation Orientation	Horizontal
For Use in Emergency Fixtures	No
For Use Outdoors in Open Fixtures	No

Electrical Characteristics

Input Voltage	120-277V
Power Factor	0.9
Operating Frequency	50 / 60 Hz
THDi	<20%

Listings

UL Recognized	Yes
UL Classified	Yes
CEC Status	Lawful for sale in California

Copyright © 2020 RAB Lighting All Rights Reserved Note: Specifications are subject to change at any time without notice

PLC-9-H-835-BYP

Case and Pallet Dimensions

	QTY	LENGTH	WIDTH	HEIGHT
CASE	12	6.5	4.9	7.1
PALLET	4032	47.2	39.4	49.6

Wiring Diagram

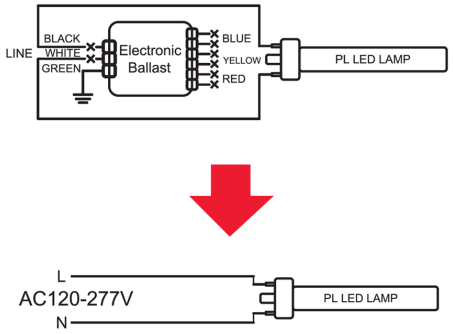

Dimension

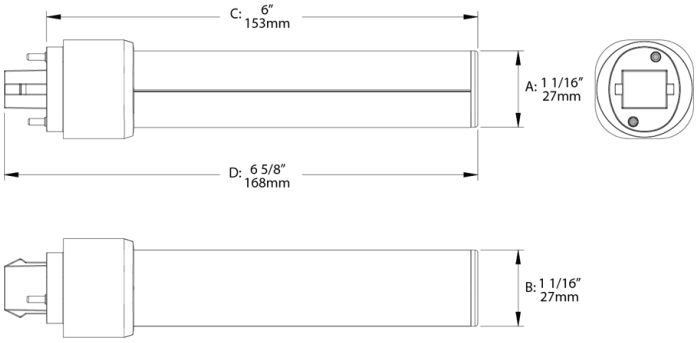

Light Distribution

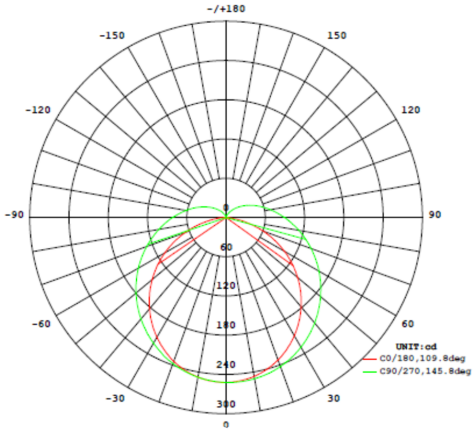

Copyright © 2020 RAB Lighting All Rights Reserved Note: Specifications are subject to change at any time without notice