HBLED13B



Color: Black

Weight: 4.3 lbs

Project:	**Type:**
Prepared By:	**Date:**

Driver Info

Type	Constant Current
120V	0.12A
208V	0.09A
240V	0.08A
277V	0.07A
Input Watts	15.6W

LED Info

Watts	13W
Color Temp	5000K (Cool)
Color Accuracy	72 CRI
L70 Lifespan	100,000
Lumens	1,799
Efficacy	115.3 lm/W

Technical Specifications

Listings

UL Listed:

Suitable for wet locations. Suitable for ground mounting.

IESNA LM-79 & IESNA LM-80 Testing:

RAB LED luminaires and LED components have been tested by an independent laboratory in accordance with IESNA LM-79 and LM-80.

DLC Listed:

This product is listed by Design Lights Consortium (DLC) as an ultra-efficient premium product that qualifies for the highest tier of rebates from DLC Member Utilities. DLC Product Code: PV5TSVJA

Performance

Lifespan:

100,000-Hour LED lifespan based on IES LM-80 results and TM-21 calculations

Construction

Swivels:

Fully adjustable with sure-grip locks. 1/2" NPS threaded arm with serrated locking swivel fits all standard mounting covers. Color matched EZ Grip lock nuts. Stainless steel screw.

Housing:

Precision die-cast aluminum housing

Gaskets:

High-temperature Silicone

Finish:

Formulated for high durability and long-lasting color

Green Technology:

Mercury and UV free. RoHS-compliant components.

Cold Weather Starting:

Minimum starting temperature is -40°C (-40°F)

Maximum Ambient Temperature:

Suitable for use in up to 40°C (104°F)

LFLOOD 13W:

LED Floodlight that reduces energy consumption by 85% compared to 100W PAR38. Spot and Flood beam patterns. Recommended for Residential and Commercial applications.

Other

Warranty:

RAB warrants that our LED products will be free from defects in materials and workmanship for a period of five (5) years from the date of delivery to the end user, including coverage of light output, color stability, driver performance and fixture finish. RAB's warranty is subject to all terms and conditions found at rablighting.com/warranty.

Equivalency:

250W BR40

Copyright © 2020 RAB Lighting All Rights Reserved Note: Specifications are subject to change at any time without notice

Technical Specifications (continued)

Other

Patents:

LFLOOD thermal Management technology is protected under utility patents pending in the U.S., Canada and China.

Buy American Act Compliance:

RAB values USA manufacturing! Upon request, RAB may be able to manufacture this product to be compliant with the Buy American Act (BAA). Please contact customer service to request a quote for the product to be made BAA compliant.

LED Characteristics

Lumen Maintenance:

The LED will deliver 70% of its initial lumens at 100,000 hours of operation

Color Consistency:

7-step MacAdam Ellipse binning to achieve consistent fixture-to-fixture color

Color Stability:

LED color temperature is warrantied to shift no more than 200K in color temperature over a 5-year period

Color Uniformity:

RAB's range of Correlated Color Temperature follows the guidelines of the American National Standard for Specifications for the Chromaticity of Solid State Lighting (SSL) Products, ANSI C78.377-2017.

Optical

Reflectors:

NEMA 5x5 floodlight reflector. Photometrics show flood configuration.

Electrical

Driver:

Multi-chip 13W high output long life LED Driver Constant Current, 100V - 277V, 50/60 Hz

THD:

8.29% at 120V, 11.04% at 277V

Surge Protection:

4kV

Dimensions

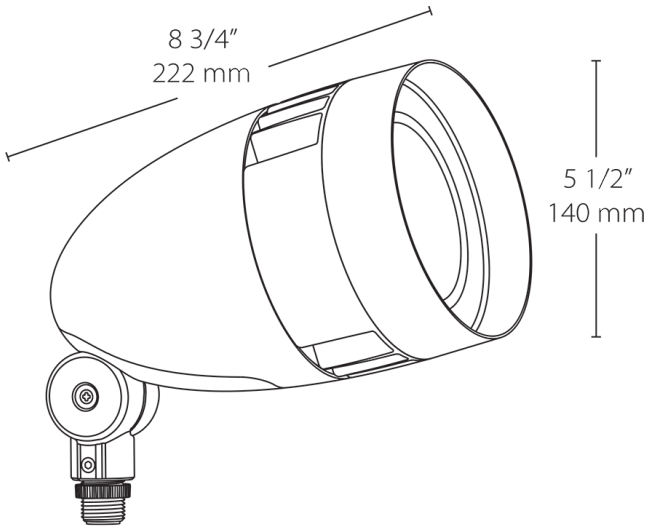

Features

- 80% energy savings vs. PAR floods
- Mount on junction box or on RAB Mighty Post
- Patent-pending "Air-Flow" technology
- 5-Year, No-Compromise Warranty

Ordering Matrix

Family	Wattage	Color Temp	Finish	Driver Options
HBLED	13		B	
	18 = 18W **26 =** 26W	**Blank =** 5000K (Cool) **N =** 4000K (Neutral) **Y =** 3000K (Warm)	**A =** Bronze **W =** White **B =** Black **VG =** Verde Green	**Blank =** No Option **/D10 =** 0-10V Dimming **/480 =** 480V (Only available for 26W)

Copyright © 2020 RAB Lighting All Rights Reserved Note: Specifications are subject to change at any time without notice