GUS2-18W/D10

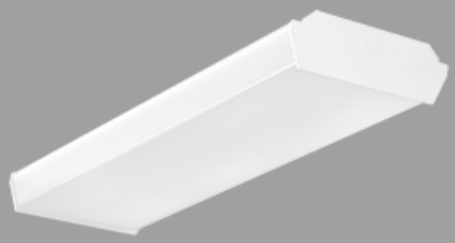

The affordable LED GUS is designed to deliver general ambient lighting for surface-mount ceiling/wall or pendant mount applications. Diffusion lens delivers improved visual performance and a more refined look. Replaces traditional 2' linear fluorescent wraparound fixtures.

Color: White

Weight: 9.3 lbs

Project:	**Type:**
Prepared By:	**Date:**

Driver Info

Type	Constant Current
120V	0.15A
208V	0.09A
240V	0.08A
277V	0.07A
Input Watts	19W

LED Info

Watts	18W
Color Temp	5000K (Cool)
Color Accuracy	83 CRI
L70 Lifespan	100,000 Hours
Lumens	2,430
Efficacy	127.9 lm/W

Technical Specifications

Compliance

UL Listed:

Suitable for damp locations

Performance

Lifespan:

100,000-Hour LED lifespan based on IES LM-80 results and TM-21 calculations

LED Characteristics

Color Stability:

LED Color temperature is warrantied to shift no more than 200K in color temperature over a 5-year period

Color Uniformity:

RAB's range of Correlated Color Temperature follows the guidelines of the American National Standard for Specifications for the Chromaticity of Solid State Lighting (SSL) Products, ANSI C78.377-2017.

Electrical

Driver:

Class 2, Constant Current, 100-277VAC, 50-60Hz, 4kV, 120V: 0.15A, 208V: 0.09A, 240V: 0.08A, 277V: 0.07A

Dimming Driver:

Driver includes dimming control wiring for 0-10V dimming systems. Requires separate 0-10V DC dimming circuit. Dims down to 10%.

THD:

8.1% at 120V, 7.8% at 277V

Power Factor:

98.8% at 120V, 95.1% at 277V

Minimum Starting Temperature:

-20°C to 40°C

Construction

Housing:

Die-formed 22 gauge, cold-rolled, post-painted steel. Post painting improves durability of the finish and eliminates the sharp edges making handling and installation safer.

Mounting:

Surface mount. Can be mounted with chains or v-hooks by others.

Lens:

Acrylic lens with diffusion for enhanced optical performance

Reflector:

Aluminum with high-reflectance (91%) powder coat applied post production for a more durable finish

Finish:

Formulated for high durability and long-lasting color

Copyright © 2020 RAB Lighting All Rights Reserved Note: Specifications are subject to change at any time without notice

Technical Specifications (continued)

Construction

Green Technology:

Mercury and UV free. RoHS-compliant components.

Other

Warranty:

RAB warrants that our LED products will be free from defects in materials and workmanship for a period of five (5) years from the date of delivery to the end user, including coverage of light output, color stability, driver performance and fixture finish. RAB's warranty is subject to all terms and conditions found at rablighting.com/warranty.

Equivalency:

Equivalent to (1) F32T8

Buy American Act Compliance:

RAB values USA manufacturing! Upon request, RAB may be able to manufacture this product to be compliant with the Buy American Act (BAA). Please contact customer service to request a quote for the product to be made BAA compliant.

Listings

DLC Listed:

This product is on the Design Lights Consortium (DLC) Qualified Products List and is eligible for rebates from DLC Member Utilities. DLC Product Code: P3XNNF50

Dimensions

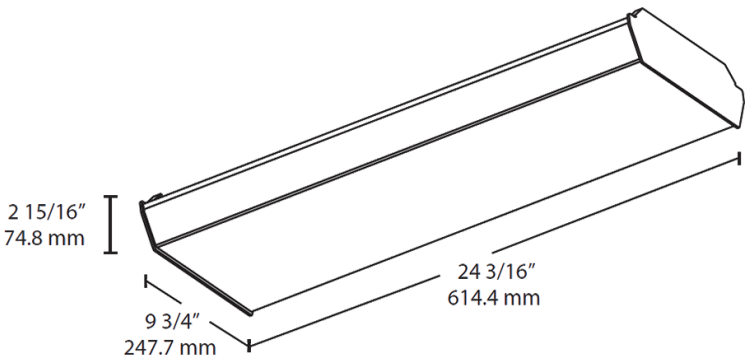

Features

- Energy-efficient, maintenance-free LED wrap fixture
- Multiple mounting options: surface, pendant or chain
- High-reflectance white finish for optimal output
- Diffusion wrap-around lens for smooth light distribution
- 0-10V dimming standard
- 100,000-Hour LED lifespan

Ordering Matrix

Family	Size		Wattage	Color Temp	Finish	Driver Options
GUS	2	–	18		W	/D10
	4 = 4 feet **2 =** 2 feet		**18 =** 18W (2 ft) **25 =** 25W (2 ft) **36 =** 36W (4 ft) **50 =** 50W (4 ft)	**Blank =** 5000K (Cool) **N =** 4000K (Neutral) **YN =** 3500K (Warm Neutral) **Y =** 3000K (Warm)	**W =** White	**/D10 =** 0-10V Dimming **/D10/E2 =** 0-10V Dimming w/ Battery Backup [1] **/D10/LC =** 0-10V Dimming w/ Lightcloud® Controller **/D10/LC/E2 =** 0-10V Dimming w/ Lightcloud® Controller and Battery Backup

[1] GUS4 only

Copyright © 2020 RAB Lighting All Rights Reserved Note: Specifications are subject to change at any time without notice