GUS4-36YNW/D10



The affordable LED GUS is designed to deliver general ambient lighting for surface-mount ceiling/wall or pendant mount applications. Diffusion lens delivers improved visual performance and a more refined look. Replaces traditional 4' linear fluorescent wraparound fixtures.

Color: White

Weight: 17.9 lbs

Project:	**Type:**
Prepared By:	**Date:**

Driver Info

Type	Constant Current
120V	0.30A
208V	0.18A
240V	0.15A
277V	0.13A
Input Watts	35.7W

LED Info

Watts	36W
Color Temp	3500K (Warm Neutral)
Color Accuracy	83 CRI
L70 Lifespan	100,000 Hours
Lumens	4,681
Efficacy	131.1 lm/W

Technical Specifications

Compliance

UL Listed:

Suitable for damp locations

Performance

Lifespan:

100,000-Hour LED lifespan based on IES LM-80 results and TM-21 calculations

LED Characteristics

Color Stability:

LED Color temperature is warrantied to shift no more than 200K in color temperature over a 5-year period

Color Uniformity:

RAB's range of Correlated Color Temperature follows the guidelines of the American National Standard for Specifications for the Chromaticity of Solid State Lighting (SSL) Products, ANSI C78.377-2017.

Electrical

Driver:

Constant current, Class 2, 120-277V, 50/60 Hz, 120V: 0.30A, 208V: 0.18A, 240V: 0.15A, 277V: 0.13A, 2kV surge protection

Dimming Driver:

Driver includes dimming control wiring for 0-10V dimming systems. Requires separate 0-10V DC dimming circuit. Dims down to 10%.

THD:

4.21% at 120V, 3.91% at 277V

Power Factor:

99.5% at 120V, 94.6% at 277V

Minimum Starting Temperature:

0° to 40°C

Construction

Housing:

Die-formed 22 gauge, cold-rolled, post-painted steel. Post painting improves durability of the finish and eliminates the sharp edges making handling and installation safer.

Mounting:

Surface mount. Can be mounted with chains or v-hooks by others.

Lens:

Acrylic lens with diffusion for enhanced optical performance

Reflector:

Aluminum with high-reflectance (91%) powder coat applied post production for a more durable finish

Finish:

Formulated for high durability and long-lasting color

Copyright © 2020 RAB Lighting All Rights Reserved Note: Specifications are subject to change at any time without notice

Technical Specifications (continued)

Construction

Green Technology:

Mercury and UV free. RoHS-compliant components.

Other

Buy American Act Compliance:

RAB values USA manufacturing! Upon request, RAB may be able to manufacture this product to be compliant with the Buy American Act (BAA). Please contact customer service to request a quote for the product to be made BAA compliant.

Listings

DLC Listed:

This product is listed by Design Lights Consortium (DLC) as an ultra-efficient premium product that qualifies for the highest tier of rebates from DLC Member Utilities. DLC Product Code: PYENHFHV

Dimensions

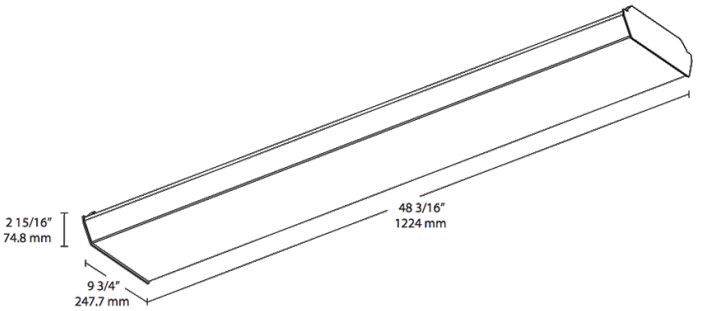

Features

- Energy-efficient, maintenance-free LED wrap fixture
- Multiple mounting options: surface, pendant or chain
- High-reflectance white finish for optimal output
- Diffusion wrap-around lens for smooth light distribution
- 0-10V dimming standard
- 100,000-Hour LED lifespan

Ordering Matrix

Family	Size		Wattage	Color Temp	Finish	Driver Options
GUS	4	–	36	YN	W	/D10
	4 = 4 feet **2 =** 2 feet		**18 =** 18W (2 ft) **25 =** 25W (2 ft) **36 =** 36W (4 ft) **50 =** 50W (4 ft)	**Blank =** 5000K (Cool) **N =** 4000K (Neutral) **YN =** 3500K (Warm Neutral) **Y =** 3000K (Warm)	**W =** White	**/D10 =** 0-10V Dimming **/D10/E2 =** 0-10V Dimming w/ Battery Backup **/D10/LC =** 0-10V Dimming w/ Lightcloud® Controller **/D10/LC/E2 =** 0-10V Dimming w/ Lightcloud® Controller and Battery Backup

Copyright © 2020 RAB Lighting All Rights Reserved Note: Specifications are subject to change at any time without notice