GUS JCAP

Thank you for buying RAB lighting fixtures. Our goal is to design the best quality products to get the job done right. We'd like to hear your comments. Call the Marketing Department at 888-RAB-1000, or email: marketing@rabweb.com

IMPORTANT

READ CAREFULLY BEFORE INSTALLING FIXTURE. RETAIN THESE INSTRUCTIONS FOR FUTURE REFERENCE.

RAB fixtures must be wired in accordance with the National Electrical Code and all applicable local codes. Proper grounding is required for safety. This product must be installed in accordance with the applicable installation code by a person familiar with the construction and operation of the product and the hazards involved.

WARNING: Make certain power is OFF before installing or maintaining fixture.

INSTALLATION

1. Remove **End Caps** (2) from both **Housings** and replace with **GUS JCAP**.
2. Secure **GUS JCAP** with **Screws (3)** and **Nuts (3)** provided as shown in figure below to join both **Housings**.
3. Secure **Housings** to mounting surface. If necessary feed wires through from one fixture to the other.

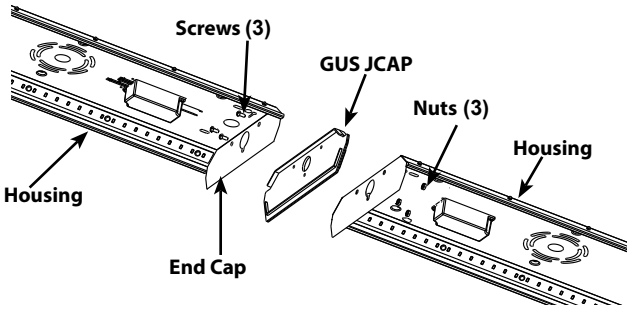

CLEANING

Clean acrylic lens with nonabrasive cleaning solution.

CAUTION: Be sure fixture temperature is cool enough to touch. Do not clean or maintain while fixture is energized.

Note: These instructions do not cover all details or variations in equipment nor do they provide for every possible situation during installation, operation or maintenance.

©2016 RAB LIGHTING Inc.
Northvale, New Jersey 07647 USA

Easy Installation & Product Help

Tech Help Line
Call our experts 888 RAB-1000

rabweb.com
Visit our website for product info

email
Answered promptly sales@rabweb.com

GUS™ SURFACE WRAP 2FT 4FT
LENS REPLACEMENT INSTRUCTIONS

Thank you for buying RAB lighting fixtures. Our goal is to design the best quality products to get the job done right. We'd like to hear your comments. Call the Marketing Department at 888-RAB-1000 or email: marketing@rabweb.com

IMPORTANT

READ CAREFULLY BEFORE INSTALLING FIXTURE. RETAIN THESE INSTRUCTIONS FOR FUTURE REFERENCE.

RAB fixtures must be wired in accordance with the National Electrical Code and all applicable local codes. Proper grounding is required for safety. THIS PRODUCT MUST BE INSTALLED IN ACCORDANCE WITH THE APPLICABLE INSTALLATION CODE BY A PERSON FAMILIAR WITH THE CONSTRUCTION AND OPERATION OF THE PRODUCT AND THE HAZARDS INVOLVED.

Make certain power is OFF before installing or maintaining fixture.

LENS REPLACEMENT- SURFACE MOUNT

1. To remove the installed lens, carefully snap out **Lens** one side at a time from **Housing** as shown in **Fig 1**.
2. Hook replacement **Lens** to one side of **Housing** and *Snap* **Lens** into place as shown in Fig. 2.

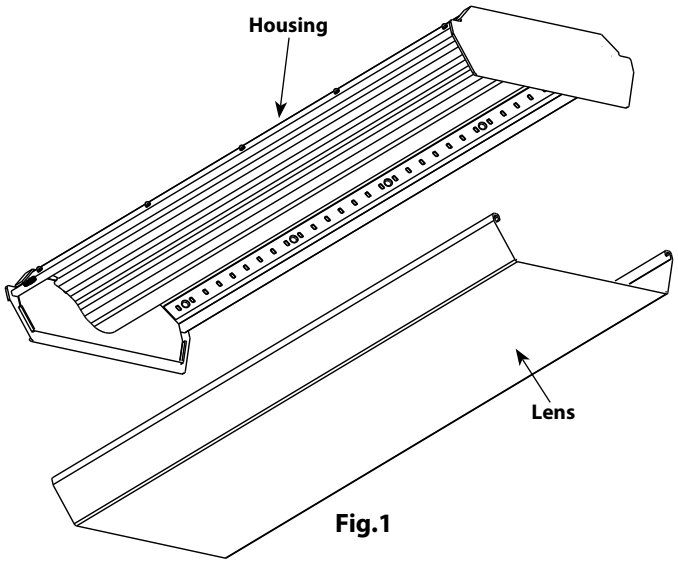

Fig.1

CLEANING & MAINTENANCE

CAUTION: Be sure fixture temperature is cool enough to touch. Do not clean or maintain while fixture is energized.

1. Clean acrylic lens with non-abrasive cleaning solution.
2. Do not open the fixture to clean the LEDs. Do not touch the LEDs.

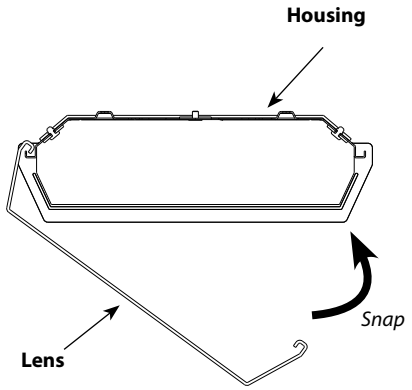

Fig.2

Pending: Pat. pending

Note: These instructions do not cover all details or variations in equipment nor do they provide for every possible situation during installation, operation or maintenance.

©2016 RAB LIGHTING Inc.
Northvale, New Jersey 07647 USA

Easy Installation & Product Help

Tech Help Line
Call our experts 888 RAB-1000

rabweb.com
Visit our website for product info

email
Answered promptly sales@rabweb.com