VANLED52W



Low-profile vandal-resistant fixture covers the footprint of most traditional canopy lights. Available in flat or drop lens with frosted and unfrosted options.

Color: White

Weight: 5.7 lbs

Project:	**Type:**
Prepared By:	**Date:**

Driver Info

Type	Constant Current
120V	0.47A
208V	0.28A
240V	0.24A
277V	0.21A
Input Watts	55.7W

LED Info

Watts	52W
Color Temp	5000K (Cool)
Color Accuracy	84 CRI
L70 Lifespan	100,000 Hours
Lumens	6,811
Efficacy	122.3 lm/W

Technical Specifications

Compliance

UL Listed:

Suitable for Wet Locations. Covered Ceiling Mount Only.

IESNA LM-79 & LM-80 Testing:

RAB LED luminaires and LED components have been tested by an independent laboratory in accordance with IESNA LM-79 and LM-80.

DLC Listed:

This product is listed by Design Lights Consortium (DLC) as an ultra-efficient premium product that qualifies for the highest tier of rebates from DLC Member Utilities. DLC Product Code: PXKSK4YE

LED Characteristics

LEDs:

Long-life, high-efficacy, surface-mount LEDs

Color Stability:

RAB LEDs exceed industry standards for chromatic stability

Color Uniformity:

RAB's range of Correlated Color Temperature follows the guidelines of the American National Standard for Specifications for the Chromaticity of Solid State Lighting (SSL) Products, ANSI C78.377-2017.

Construction

Maximum Ambient Temperature:

Suitable for use in up to 40°C (104°F)

Cold Weather Starting:

Minimum starting temperature is -40°C (-40°F)

Lens:

Vandal-resistant polycarbonate textured opaque for low glare drop lens

Housing:

Die-cast aluminum housing and lens frame with (4) 1/2" NPS side conduit entries and weatherproof rear wire plug and access plate

Mounting:

Ceiling mount to recessed junction with knockout template or directy to ceiling surface, utilizing side conduit entry points

IP Rating:

Ingress protection rating of IP66 for dust and water

Air Tight:

Housing certified Air Tight as per ASTM E283

Finish:

Our environmentally friendly polyester powder coatings are formulated for high-durability and long-lasting color

Copyright © 2021 RAB Lighting All Rights Reserved Note: Specifications are subject to change at any time without notice

Technical Specifications (continued)

Other

Equivalency:

Equivalent to 150W Metal Halide

Warranty:

RAB warrants that our LED products will be free from defects in materials and workmanship for a period of five (5) years from the date of delivery to the end user, including coverage of light output, color stability, driver performance and fixture finish. RAB's warranty is subject to all terms and conditions found at rablighting.com/warranty.

Buy American Act Compliance:

RAB values USA manufacturing! Upon request, RAB may be able to manufacture this product to be compliant with the Buy American Act (BAA). Please contact customer service to request a quote for the product to be made BAA compliant.

Electrical

Driver:

Class 2, Constant Current, 120-277V, 50-60Hz, 120V: 0.47A, 208V: 0.28A, 240V: 0.24A, 277V: 0.21A

THD:

5.23% at 120V, 6.73% at 277V

Power Factor:

99.7% at 120V, 94.7% at 277V

Dimensions

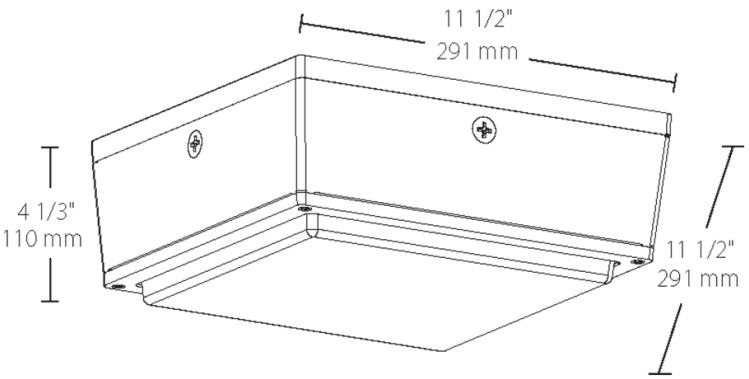

Features

- Fits the footprint of older canopy lights
- Vandal resistant and UV resistant lens
- Ultra-high efficiency
- Clean, contemporary, low-profile design
- Available with drop lens or flat lens
- IP66 rated, keeps dust, bugs and water out
- Photo and motion sensor options available

Copyright © 2021 RAB Lighting All Rights Reserved Note: Specifications are subject to change at any time without notice

VANLED52W

Ordering Matrix

Family	Wattage	Color Temp	Lens-Optics	Finish	Voltage	Options	Suffix
VANLED	52			W			
	10 = 10W **20 =** 20W **28 =** 28W **40 =** 40W **52 =** 52W **65 =** 65W **75 =** 75W	**Blank =** 5000K (Cool) **N =** 4000K (Neutral) **Y =** 3000K (Warm)	**Blank =** Drop lens **F =** Flat lens [1] **FR =** Frosted Drop Lens **FFR =** Frosted Flat Lens [1]	**Blank =** Bronze **W =** White	**Blank =** 120-277V, 0-10V Dim Standard **/480 =** 480V, 0-10V Dim Standard	**Blank =** No Options **/MVS =** Microwave Motion Sensor [1] **/WS =** Wattstopper, 8ft **/WS2 =** Wattstopper, 20ft **/PCS =** 120V Swivel Photocell **/PCS2 =** 277V Swivel Photocell **/PCS4 =** 480V Swivel Photocell **/LC =** Lightcloud® Control factory Installed **/E2 =** Battery, 120-277V only	**Blank =** Standard **USA =** Complies with the BAA

[1] /MVS option not available with F and FFR lens

Copyright © 2021 RAB Lighting All Rights Reserved Note: Specifications are subject to change at any time without notice