VXBRLED13NDG/UP/PCS2



High performance LED Vaporproof fixture. A classic design with cutting edge LED technology. Comes with die cast guard and frosted globe. Specially designed for mounting as an uplight.

Color: Natural

Weight: 5.0 lbs

Project:	**Type:**
Prepared By:	**Date:**

Driver Info

Type	Constant Current
120V	N/A
208V	0.08A
240V	0.07A
277V	0.06A
Input Watts	15.2W

LED Info

Watts	13W
Color Temp	4000K (Neutral)
Color Accuracy	88 CRI
L70 Lifespan	100,000 Hours
Lumens	595
Efficacy	39.1 lm/W

Technical Specifications

Compliance

UL Listed:

Suitable for wet locations. Suitable for mounting within 1.2m (4ft) of the ground.

IESNA LM-79 & IESNA LM-80 Testing:

RAB LED luminaires and LED components have been tested by an independent laboratory in accordance with IESNA LM-79 and LM-80.

Electrical

Driver:

Multi-chip single 13W high output long life LED Driver. Constant Current,100V-277V, 50/60 Hz., 100-240VAC.3-.15 Amps 277VAC.15 Amps. Will deliver 70% of its initial lumens at 100,000 hours based on LM-80 Tests.

Photocell:

277V Swivel Photocell Included. Photocell is compatible with 208V-277V.

Surge Protection:

4kV

Performance

Lifespan:

100,000-Hour LED lifespan based on IES LM-80 results and TM-21 calculations

Construction

Specification:

These specifications are for fixture with Frosted Glass Globe and Die Cast Guard combination. Consult warehouse for different fixture combinations.

Construction:

Die cast aluminum housing and door. Tether connects back housing halves for safety.

Thermal Management (Patent Pending):

Die cast aluminum LED housing designed for maximum heat dissipation

Cold Weather Starting:

Minimum starting temperature is -40°C (-40°F)

Ambient Temperature:

Suitable for use in up to 35°C (95°F)

Housing:

Die-cast aluminum housing and driver housing

Mounting:

Three 1/2" NPS conduit entry points

Guard and Globe:

Shot blasted guard with frosted globe

Copyright © 2021 RAB Lighting All Rights Reserved Note: Specifications are subject to change at any time without notice

Technical Specifications (continued)

Construction

Reflector:

High quality hydroformed semi-specular aluminum

Gaskets:

High-temperature Silicone

Finish:

Natural shot blasted aluminum

Green Technology:

Mercury and UV free. RoHS-compliant components.

LED Characteristics

Color Consistency:

3-step MacAdam Ellipse binning to achieve consistent fixture-to-fixture color

Color Stability:

LED color temperature is warrantied to shift no more than 200K in color temperature over a 5-year period

Color Uniformity:

RAB's range of Correlated Color Temperature follows the guidelines of the American National Standard for Specifications for the Chromaticity of Solid State Lighting (SSL) Products, ANSI C78.377-2017.

Other

Warranty:

RAB warrants that our LED products will be free from defects in materials and workmanship for a period of five (5) years from the date of delivery to the end user, including coverage of light output, color stability, driver performance and fixture finish. RAB's warranty is subject to all terms and conditions found at rablighting.com/warranty.

Patents:

The VXBRLED design is protected by U.S. Pat. D673,319 and in Taiwan Pat. D150463.

Equivalency:

Equivalent to 26W CFL

Buy American Act Compliance:

RAB values USA manufacturing! Upon request, RAB may be able to manufacture this product to be compliant with the Buy American Act (BAA). Please contact customer service to request a quote for the product to be made BAA compliant.

Dimensions

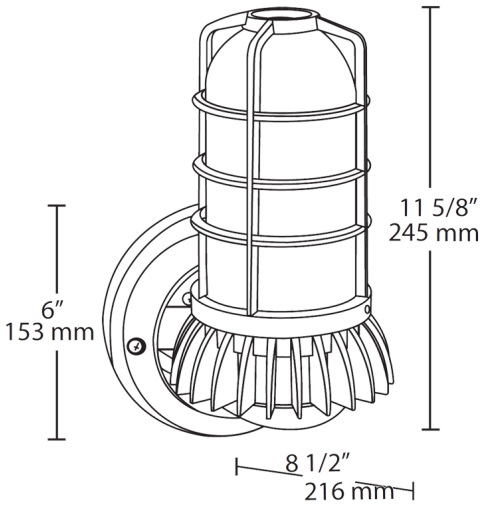

Features

- Specially designed for mounting as an uplight
- 100,000-hour life based on LM-80 results and TM-21 calculations
- Die Cast Aluminum Housing
- Classic design with state of the art LED technology
- Frosted globe emits uniform glow

Copyright © 2021 RAB Lighting All Rights Reserved Note: Specifications are subject to change at any time without notice