LES13Y



Economical low-profile 13W LED floodlight delivers a wide 6H X 6V beam distribution and replaces 75 Watt halogen BR30.

Color: Bronze

Weight: 1.3 lbs

Project:	**Type:**
Prepared By:	**Date:**

Driver Info

Type	Constant Current
120V	0.11A
208V	N/A
240V	N/A
277V	N/A
Input Watts	13.3W

LED Info

Watts	13W
Color Temp	3000K (Warm)
Color Accuracy	83 CRI
L70 Lifespan	60,000 Hours
Lumens	1,045
Efficacy	78.6 lm/W

Technical Specifications

Compliance

UL Listed:

Suitable for wet locations. Suitable for mounting within 4 feet of the ground.

ENERGY STAR V2.0:

This product is ENERGY STAR® Version 2.0 Certified.

IESNA LM-79 & LM-80 Testing:

RAB LED luminaires and LED components have been tested by an independent laboratory in accordance with IESNA LM-79 and LM-80.

Optical

NEMA Type:

6H x 6V Beam Spread

Construction

Cold Weather Starting:

Minimum starting temperature is -40°C (-40°F)

Maximum Ambient Temperature:

Suitable for use in up to 40°C (104°F)

IP Rating:

Ingress protection rating of IP66 for dust and water

Housing:

Precision die-cast aluminum housing, lens frame and mounting arm

Reflector:

Vacuum-metalized polycarbonate

Lens:

Diffused glass for smooth, even light distribution

Mounting:

Heavy-duty mounting arm with "O" ring seal, wire seal plug & stainless steel screw

Gaskets:

High-temperature silicone gaskets

Finish:

Our environmentally friendly polyester powder coatings are formulated for high-durability and long-lasting color

Green Technology:

Mercury and UV free. RoHS-compliant components.

Copyright © 2021 RAB Lighting All Rights Reserved Note: Specifications are subject to change at any time without notice

Technical Specifications (continued)

Electrical

Driver:

120V driver, 50/60/ Hz, 0.11A, 114mA

THD:

11.5% at 120V

Power Factor:

99.3% at 120V

Note:

All values are typical (tolerance +/- 10%)

LED Characteristics

LEDs:

Long-life, high-efficacy, surface-mount LEDs

Color Uniformity:

RAB's range of Correlated Color Temperature follows the guidelines of the American National Standard for Specifications for the Chromaticity of Solid State Lighting (SSL) Products, ANSI C78.377-2017.

Other

5 Yr Limited Warranty:

Fixture operation and paint finish are covered for a period of 5-years. See our full warranty here.

Equivalency:

75W PAR30

Buy American Act Compliance:

RAB values USA manufacturing! Upon request, RAB may be able to manufacture this product to be compliant with the Buy American Act (BAA). Please contact customer service to request a quote for the product to be made BAA compliant.

Dimensions

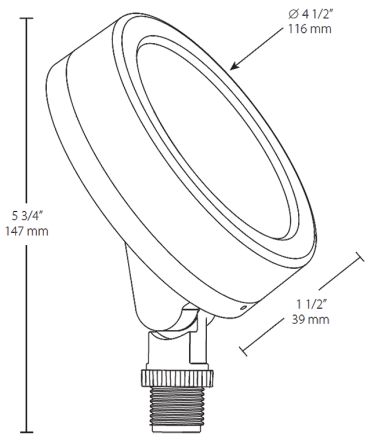

Features

- Equivalent to 75W halogen BR30 wide flood
- Wide 6H x 6V distribution
- Diffused lens for smooth, even light distribution
- Energy Star® certified
- Very low profile
- Adjustable knuckle
- 60,000-Hour LED lifespan

Ordering Matrix

Family	Wattage	Color Temp	Finish
LES	13	Y	
	13 = 13W	**Blank =** 5000K (Cool) **N =** 4000K (Neutral) **Y =** 3000K (Warm)	**Blank =** Bronze **B =** Black [1] **VG =** Verde Green [1] **W =** White

[1] Not available with sensor.

Copyright © 2021 RAB Lighting All Rights Reserved Note: Specifications are subject to change at any time without notice