INSTRUCTIONS
4" Recessed Retrofit

RAB Lighting is committed to creating high-quality, affordable, well-designed and energy-efficient LED lighting and controls that make it easy for electricians to install and end users to save energy. We'd love to hear your comments. Please call the Marketing Department at 888-RAB-1000 or email: marketing@rablighting.com



R4R88XX120WS
R4R89XX120WS



R4R88XX120WB
R4R89XX120WB

IMPORTANT

READ CAREFULLY BEFORE INSTALLING FIXTURE. RETAIN THESE INSTRUCTIONS FOR FUTURE REFERENCE.
RAB fixtures must be wired in accordance with the National Electrical Code and all applicable local codes. Proper grounding is required for safety. THIS PRODUCT MUST BE INSTALLED IN ACCORDANCE WITH THE APPLICABLE INSTALLATION CODE BY A PERSON FAMILIAR WITH THE CONSTRUCTION AND OPERATION OF THE PRODUCT AND THE HAZARDS INVOLVED.

WARNINGS:

- **Risk of electrical shock. Disconnect power at fuse or circuit breaker before installing or servicing.**
- **To prevent early lamp failure, lamp should only be installed in operating environments ranging between-30˚C and +40˚C (-22°F and+104°F).**
- **No user serviceable parts inside. To avoid electrical shock do not disassemble product.**
- **Risk of fire or electric shock, LED Retrofit Kit installation requires knowledge of luminaires electrical systems. If not qualified, do not attempt installation. Contact a qualified electrician.**
- **Risk of fire or electric shock, Install this kit only in luminaires that have the construction features and min dimensions shown in the Figure 1 and where the input rating of the retrofit kit does not exceed the input rating of the luminaire.**
- **Do not make or alter any open holes in an enclosure of wiring or electrical components during kit installation**
- **To prevent wiring damage or abrasion, do not expose wiring to edges of sheet metal or other sharp objects.**
- **Installers should not disconnect existing wires from lampholder terminals to make new connections at lampholder terminals, Instead installers should cut existing lampholder leads away from the lampholder and make new electrical connections to lampholder lead wires by employing applicable connectors.**
- **This retrofit kit is accepted as a component of a luminaire where the suitability of the combination shall be determined by authorities having jurisdiction.**
- **This device is not intended for use with emergency exists.**
- **This retrofit kits suitable for wet locations luminaires specified as below : Type Non IC; Type IC; Covered ceiling ; Uncovered ceiling.**

WHAT'S IN THE BOX

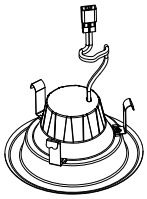

Downlight (1)

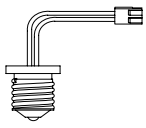

E26 Adaptor (1)



Lumi Sticker (1)

TOOLS NEEDED

The Recessed LED Downlight is designed to fit into a 4" housing. No tools are necessary for installation.

MIN.LUMINAIRE DIMENSION

Fig: 1

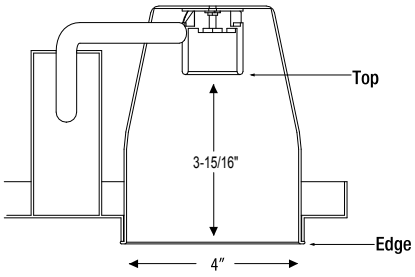

Note: These instructions do not cover all details or variations in equipment nor do they provide for every possible situation during installation, operation or maintenance.

INSTRUCTIONS
4" Recessed Retrofit

RAB Lighting is committed to creating high-quality, affordable, well-designed and energy-efficient LED lighting and controls that make it easy for electricians to install and end users to save energy. We'd love to hear your comments. Please call the Marketing Department at 888-RAB-1000 or email: marketing@rablighting.com

INSTALLATION INSTRUCTIONS

1. Make sure the power is turned off at the source to the recessed housing(s)that you are installing the fixture(s) in. Remove existing trim and CFL, or Incandescent bulbs.
2. Screw the E26 adapter into the socket inside the housing. *(Fig. 2)*

Fig: 2

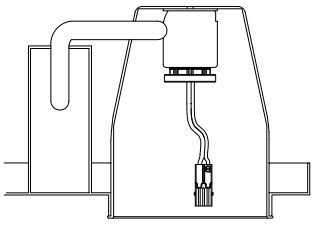

3. Plug E26 base cable connection into the recessed housing. *(Fig. 3)*

Fig: 3

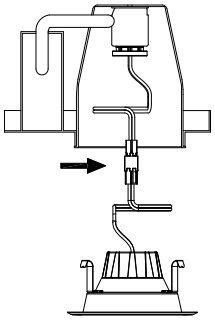

4. Carefully route wires into fixture, simply slide the trim and metal friction clips into the housing. *(Fig. 4)*

Fig: 4

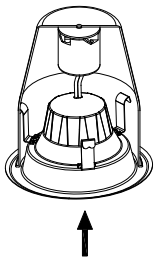

5. Push the LED trim into the housing until flush with ceiling. *(Fig. 5)*

Fig: 5

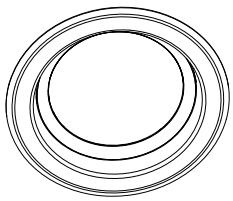

DIMENSIONAL DRAWINGS

R4R88XX120WS
R4R89XX120WS

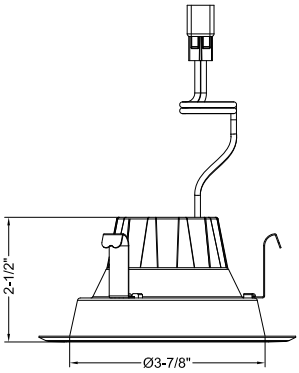

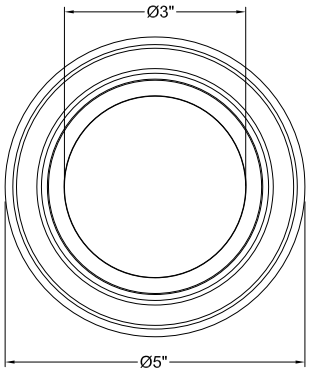

R4R88XX120WB
R4R89XX120WB

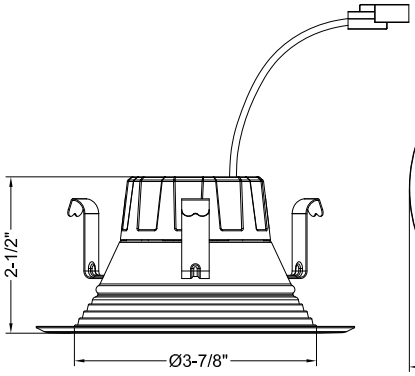

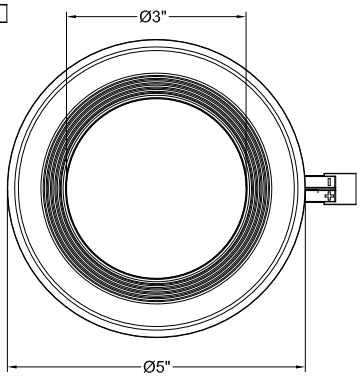

© 2019 RAB LIGHTING Inc.
Northvale, New Jersey 07647 USA

Easy Answers

rablighting.com	Tech Help Line	e-mail	Free Lighting Layouts
Visit our website for product info	Call our experts: 888 722-1000	Answered promptly - sales@rablighting.com	Answered online or by request

RAB WARRANTY: RAB's warranty is subject to all terms and conditions found at rablighting.com/warranty.