G25-5-E26-927-F-F

RAB | Residential



UPC: 192552000192

Color: Frosted

Weight: 0.1 lbs

Project:	Type:
Prepared By:	Date:

Technical Specifications

Performance

Product Type:
Decorative

Input Wattage:
5W

Lumens (Nominal):
500lm

L70 Lifespan:
15,000-Hour LED lifespan based on IES LM-70 results

Wattage Equivalency:
60W

LED Characteristics

Color Accuracy (CRI):
90 CRI

Color Temperature:
2700K

Electrical

Power Factor:
>0.7

Dimmable:
Yes, down to 10%

Input Voltage:
120V

Operating Frequency:
60 Hz

Operating Temperature:
-20°C - 40°C

Construction

Bulb Shape:
G25

Enclosure Material:
Glass

Copyright © 2022 RAB Lighting All Rights Reserved Note: Specifications are subject to change at any time without notice

Technical Specifications (continued)

Construction

Housing Finish:

Frosted

Base Type:

E26

Optical

Beam Angle:

360°

Other

Technology EQ:

Incandescent

Warranty:

RAB warrants that our LED products will be free from defects in materials and workmanship for a period of three (3) years from the date of delivery to the end user, including coverage of light output, color stability, driver performance and fixture finish. RAB's warranty is subject to all terms and conditions found at rablighting.com/warranty.

Buy American Act Compliance:

RAB values USA manufacturing! Upon request, RAB may be able to manufacture this product to be compliant with the Buy American Act (BAA). Please contact customer service to request a quote for the product to be made BAA compliant.

Compliance

Safety Listing:

UL Listed

Environment/Fixture Rating:

Wet / Enclosed

ENERGY STAR V2.0:

This product is ENERGY STAR® Version 2.0 Certified

Energy Star ID:

2366770

T20 Compliant:

Yes, Title 20 Tier 2

RoHS:

Mercury and UV free. RoHS-compliant components.

FCC:

Complies with Part 15 of the FCC Rules

Model Number:

G25-5-E26-927-F-F

Minimum Compartment Size

Length x Width x Height [in]	Lamp Quantity
10.3 x 6.9 x 5.7	1

Case and Pallet Dimensions

	QTY	LENGTH (in)	WIDTH (in)	HEIGHT (in)
CASE	6	0	0	0
PALLET	528	0	0	0

Dimension

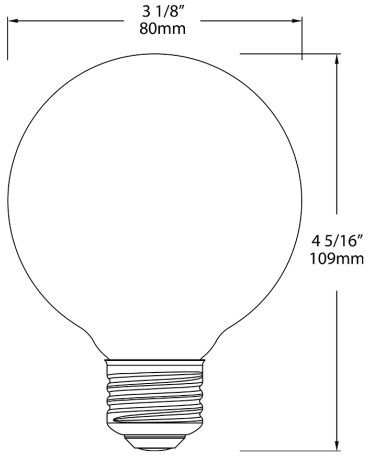

Copyright © 2022 RAB Lighting All Rights Reserved Note: Specifications are subject to change at any time without notice

Features

- Replacement for conventional decorative lamps
- Filament LED construction gives a unique traditional look and feel for decorative and ambient applications
- Produces rich and vibrant colors, >90CRI
- Rated for use in enclosed and open fixtures in wet locations
- Longer lifespan compared to legacy equivalents minimizes replacement and maintenance costs
- Title 20 Compliant, ENERGY STAR Compliant, UL Listed
- Smooth uniform dimming down to 10% (check dimmer compatibility list)

Ordering Matrix

Family	Wattage	Base Type	CRI/Color Temp	Type	Finish
G25	5	E26	927	F	F
	3 = 3W **5 =** 5W	**E26 =** E26	**950 =** 90 CRI, 5000K **940 =** 90 CRI, 4000K **930 =** 90 CRI, 3000K **927 =** 90 CRI, 2700K	**F =** Filament	**C =** Clear **F =** Frosted

Copyright © 2022 RAB Lighting All Rights Reserved Note: Specifications are subject to change at any time without notice