PLS-5.2-H-830-HYB



UPC: 192552007283

Weight: 0.0 lbs

Project:	Type:
Prepared By:	Date:

Technical Specifications

Performance

Product Type:
Compact

Input Wattage:
5.5W

Lumens (Nominal):
600lm

Efficacy:
109 lm/W

L70 Lifespan:
50,000-Hour LED lifespan based on IES LM-70 results

Wattage Equivalency:
11W CFL

Compliance

UL Listed:
Suitable for damp locations

Enclosed Fixtures:
Suitable for use in enclosed fixtures

LED Characteristics

Color Temperature:
3000K

Color Accuracy (CRI):
≥80 CRI

Construction

Bulb Shape:
PLS-Horizontal

Base Type:
Gx23

Endcap Material:
Copper

Enclosure Material:
Polycarbonate

Copyright © 2022 RAB Lighting All Rights Reserved Note: Specifications are subject to change at any time without notice

Technical Specifications (continued)

Optical

Beam Angle:

120°

Electrical

THD:

20%

Power Factor:

0.9

Flicker:

50%

Operating Temperature:

-20°C - 45°C (-4°F - 113°F)

Input Voltage:

120-277V

Operating Frequency:

50/60Hz

Other

Warranty:

RAB warrants that our LED products will be free from defects in materials and workmanship for a period of five (5) years from the date of delivery to the end user, including coverage of light output, color stability, driver performance and fixture finish. RAB's warranty is subject to all terms and conditions found at rablighting.com/warranty.

Buy American Act Compliance:

RAB values USA manufacturing! Upon request, RAB may be able to manufacture this product to be compliant with the Buy American Act (BAA). Please contact customer service to request a quote for the product to be made BAA compliant.

Case and Pallet Dimensions

	QTY	LENGTH (in)	WIDTH (in)	HEIGHT (in)
CASE	12	7.2	5.4	2.9
PALLET	0	0	0	0

Dimension

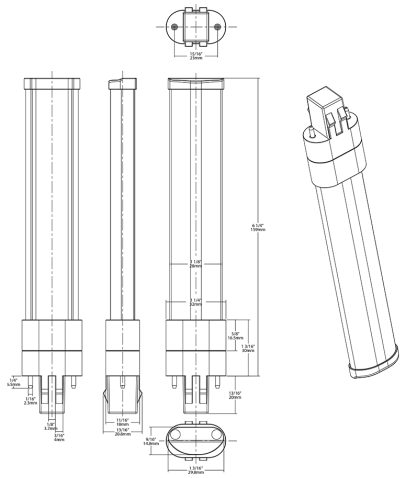

Copyright © 2022 RAB Lighting All Rights Reserved Note: Specifications are subject to change at any time without notice

PLS-5.2-H-830-HYB

Features

- Replaces 13W CFL Lamps
- Plug and Play on existing magnetic CFL ballasts or can be wired directly to line voltage without need for an external driver or ballast
- Compatible with Gx23 base installations
- 50,000 hour Lifespan
- Environmentally friendly, no mercury used
- UL Classified
- Rated for use in enclosed and open fixtures in dry or damp locations
- 5 Year No Compromise Warranty

Ordering Matrix

Family		Wattage		Orientation		CRI/Color Temp		Installation Type
PLS	–	5.2	–	H	–	830	–	HYB
		3.5 = 3.5W **5 =** 5W **5.2 =** 5.2W		**H =** Horizontal		**840 =** 80 CRI, 4000K **835 =** 80 CRI, 3500K **830 =** 80 CRI, 3000K **827 =** 80 CRI, 2700K		**HYB =** Hybrid

Copyright © 2022 RAB Lighting All Rights Reserved Note: Specifications are subject to change at any time without notice