YBLED26/ARM

RAB

High output LED yardblaster delivers enough light to hit the broad side of a barn. Durable finish withstands harsh environments.

Color: Silver gray

Weight: 12.0 lbs

Project:	Type:
Prepared By:	Date:

Driver Info

Type	Constant Current
120V	0.5A
208V	N/A
240V	N/A
277V	N/A
Input Watts	30W

LED Info

Watts	26W
Color Temp	5000K (Cool)
Color Accuracy	76 CRI
L70 Lifespan	100,000 Hours
Lumens	3,685 lm
Efficacy	122.8 lm/W

Technical Specifications

Compliance

UL Listed:

Suitable for wet locations

IESNA LM-79 & LM-80 Testing:

RAB LED luminaires and LED components have been tested by an independent laboratory in accordance with IESNA LM-79 and LM-80

DLC Listed:

This product is on the Design Lights Consortium (DLC) Qualified Products List and is eligible for rebates from DLC Member Utilities.
DLC Product Code: P417W62F

Electrical

Driver:

Constant Current, 120V, 50/60 Hz, 700mA, 120V: 0.6A, Power Factor: 99.3%

THD:

6.8% at 120V, 12.4% at 277V

Power Factor:

99.5% at 120V, 93.6% at 277V

Photocell:

Integrated 120V compatible photocell included

Surge Protection:

2kV

LED Characteristics

LEDs:

Multi-chip, high-output, long-life LED

Color Stability:

LED color temperature is warrantied to shift no more than 200K in color temperature over a 5-year period

Color Uniformity:

RAB's range of Correlated Color Temperature follows the guidelines of the American National Standard for Specifications for the Chromaticity of Solid State Lighting (SSL) Products, ANSI C78.377-2017.

Performance

Lifespan:

100,000-Hour LED lifespan based on IES LM-80 results and TM-21 calculations

Wattage Equivalency:

Equivalent to 150 HPS

Construction

Cold Weather Starting:

The minimum starting temperature is -40°C (-40°F)

Copyright © 2023 RAB Lighting All Rights Reserved Note: Specifications are subject to change at any time without notice

Technical Specifications (continued)

Construction

Housing:

Precision die-cast aluminum housing and arm

Mounting:

Mounts on pole

Effective Projected Area:

EPA = 0.3

Recommended Mounting Height:

15 ft

Lens:

High-impact, frosted polycarbonate lens

Reflector:

High-reflectance white paint

Gaskets:

High-temperature silicone

Finish:

Our environmentally friendly polyester powder coatings are formulated for high-durability and long-lasting color

Green Technology:

Mercury and UV free. RoHS-compliant components.

Other

Patents:

The design of YBLED26 is protected by patents pending in US, Canada, China, Taiwan and Mexico

Buy American Act Compliance:

RAB values USA manufacturing! Upon request, RAB may be able to manufacture this product to be compliant with the Buy American Act (BAA). Please contact customer service to request a quote for the product to be made BAA compliant.

Optical

BUG Rating:

B1 U2 G1

Dimensions

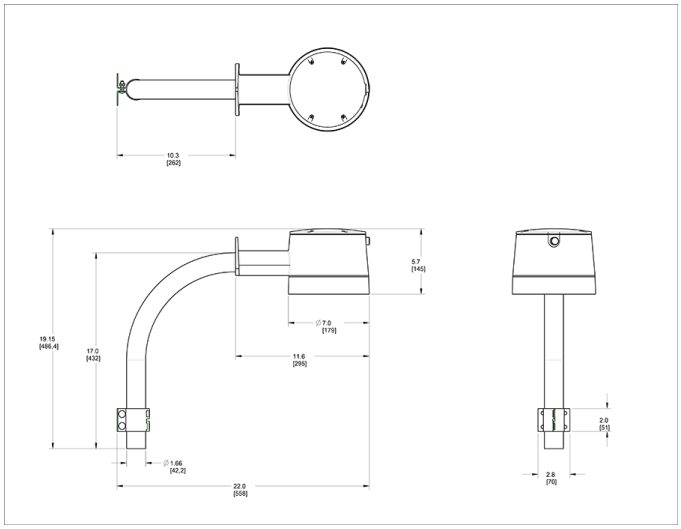

Features

- Widespread light distribution illuminates large areas
- Vandal-resistant
- High-impact polycarbonate lens
- Rugged die-cast aluminum housing withstands harsh environments
- Integrated dusk to dawn photocell
- 100,000-hour LED lifespan

Ordering Matrix

Family	Wattage	Color Temp	Mounting	Dimming	Options
YBLED	26		/ARM		
	26 = 26W **40** = 40W **60** = 60W	**Blank** = 5000K Cool **Y** = 3000K Warm **N** = 4000K Neutral	**Blank** = Wall **/ARM** = Arm	**Blank** = No Dimming [3] **/D10** = 0-10V Dimming [1]	**/PCT** = Twistlock Photocell **/5PR** = 5-Pin Receptacle **/LC** = Lightcloud® Controller **Blank** = Button Photocell [2] **/PCU** = Standard Button Photocell

[1] *Available only in 40W & 60W with /5PR or /LC*
[2] *Standard with 26W*
[3] *Available only in the Blank,/PCU or /PCT options*

Copyright © 2023 RAB Lighting All Rights Reserved Note: Specifications are subject to change at any time without notice