PUCKFA-TRIM-4R-BRS



Color: Bronze

Weight: 0.1 lbs

Project:	Type:
Prepared By:	Date:

Technical Specifications

Performance

Description:

4-inch magnetic bronze color trim for PUCKFA-4R

Product Type:

Recessed Downlights

Construction

Material:

Metal

Trim Style:

Smooth Trim

Shape:

Round

Size:

4"

Other

Buy American Act Compliance:

RAB values USA manufacturing! Upon request, RAB may be able to manufacture this product to be compliant with the Buy American Act (BAA). Please contact customer service to request a quote for the product to be made BAA compliant.

Copyright © 2023 RAB Lighting All Rights Reserved Note: Specifications are subject to change at any time without notice

PUCKFA-TRIM-4R-BRS

Dimensions

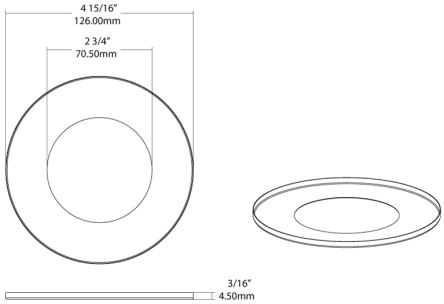

Features

- Slim wafer design - fits in 4" can or 4" J-Box
- Suitable for dry, damp, and wet environments
- Steel trim with magnetic design for quick trim replacement
- Trim color options available in Brushed Nickel, Black, and Bronze
- Includes E26 cap as an accessory to meet T24 & T20 requirements
- Field adjustable color temperature options from 2700/3000/3500/4000/5000K
- High performance >90CRI to provide accurate color rendering

Ordering Matrix

Family	Size	Shape	Wattage	CRI/Color Temp
PUCKFA	TRIM	4R	BR	S
	4 = 4"	**R =** Round	**7.5 =** 7.5W	**9CCT =** 90 CRI, 5000/4000/3500/3000/2700K

Copyright © 2023 RAB Lighting All Rights Reserved Note: Specifications are subject to change at any time without notice