SMKPANEL1x4
INSTALLATION INSTRUCTIONS

Thank you for buying RAB lighting fixtures. Our goal is to design the best quality products to get the job done right. We'd like to hear your comments. Call the Marketing Department at 888-RAB-1000 or email: marketing@rabweb.com

IMPORTANT

READ CAREFULLY BEFORE INSTALLING FIXTURE. RETAIN THESE INSTRUCTIONS FOR FUTURE REFERENCE.

RAB fixtures must be wired in accordance with the National Electrical Code and all applicable local codes. Proper grounding is required for safety. THIS PRODUCT MUST BE INSTALLED IN ACCORDANCE WITH THE APPLICABLE INSTALLATION CODE BY A PERSON FAMILIAR WITH THE CONSTRUCTION AND OPERATION OF THE PRODUCT AND THE HAZARDS INVOLVED.

Make certain power is OFF before installing or maintaining fixture.

SAFETY INSTRUCTIONS

WARNING: Install Surface Mount Canopy & 1X4 Fixture per local codes. Suitable for installation in Sheet Rock/ Plasterboard in both Insulated Ceilings and Non-Insulated Ceilings. Not for continuous row mounting.

WARNING: Surface Drywall kit to be independently supported to building structure according to NEC and local codes.

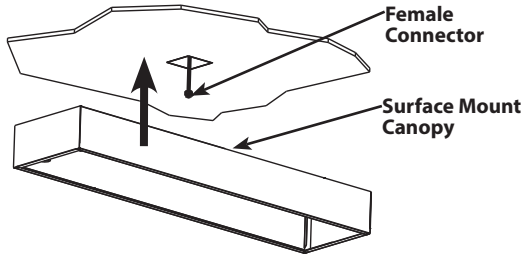

DRYWALL MOUNTING

The fixture is suitable only for INDOOR SURFACE CEILING application.

To mount on an insulated or non-insulated - sheet rock ceiling follow the steps below.

1. Connect **Female Connector** to power supply. Pull **Female Connector** from junction box (by others) through the center access hole of **Surface Mount Canopy** as shown in figure.
   Note - Connectors provided are for On-Off driver option. Connectors and wires for dimming control must be supplied by others.
2. Center the **Surface Mount Canopy** to ceiling over junction box (by others). Secure the **Surface Mount Canopy** to ceiling, with appropriate mounting hardware suitable for the mounting surface as per NEC and local codes, to support the weight of 25 lbs.
3. Remove one **End Panel** of the **Surface Mount Canopy** by loosening (2) 8-32 **Screws**.
4. Firmly bend the pre-installed **Grid Clips (4)** flat against the **1X4 Fixture** (Available upon request). Connect **Male Connector** to driver leads from **Splice Box**.
5. Slide the **1X4 Fixture** into the **Surface Mount Canopy** by following directional arrow. Plug **Female** and **Male Connectors** to complete electrical splices by following wiring directions on 1X4 fixture instruction sheet.
   WARNING: To prevent wiring damage or abrasion, do not expose wiring to edges of sheet metal or other sharp objects.
6. Replace **End Panel** to **Surface Mount Canopy** and tighten (2) 8-32 **Screws**.

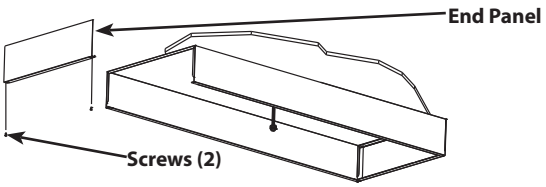

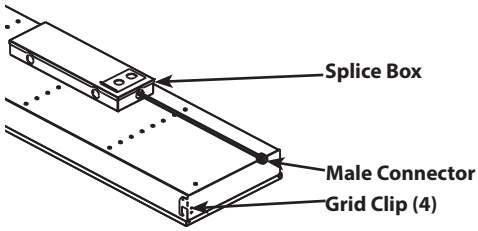

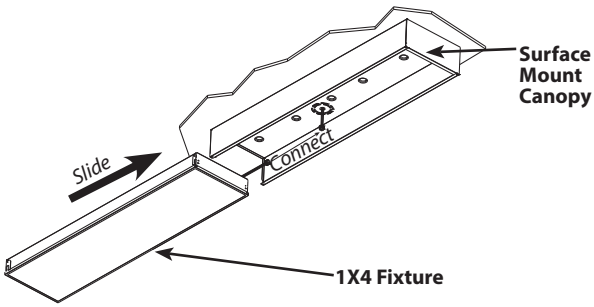

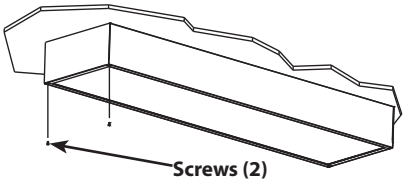

Note: These instructions do not cover all details or variations in equipment nor do they provide for every possible situation during installation, operation or maintenance.

©2015 RAB LIGHTING Inc.
Northvale, New Jersey 07647 USA

SMKPANEL1X4 IN 0915
73336-RAB

Easy Installation & Product Help

Tech Help Line
Call our experts 888 RAB-1000

rabweb.com
Visit our website for product info

email
Answered promptly sales@rabweb.com