# HAT4SW



Color: White

Weight: 0.1 lbs

| | |
|---|---|
| **Project:** | **Type:** |
| **Prepared By:** | **Date:** |

## Technical Specifications

### Performance

**Description:**

4-inch square white smooth trim for HALED, see Trim Compatibility List

**Product Type:**

Recessed Downlights

**Lumens:**

5000K: 1,060 lm
4000K: 1,060 lm
3500K: 1,060 lm
3000K: 1,030 lm
2700K: 1,000 lm

**Efficacy:**

5000K: 88 Lm/W
4000K: 88 Lm/W
3500K: 88 Lm/W
3000K: 86 Lm/W
2700K: 83 Lm/W

### Construction

**Trim Component:**

This component must be ordered with 4" HALED downlight module in order to make a complete fixture. See here for " 4" HALED module.

**Material:**

Metal

**Trim Style:**

Smooth Trim

**Shape:**

Square

### Other

**Note:**

All values are typical (tolerance +/- 10%)

**Buy American Act Compliance:**

RAB values USA manufacturing! Upon request, RAB may be able to manufacture this product to be compliant with the Buy American Act (BAA). Please contact customer service to request a quote for the product to be made BAA compliant.


Copyright © 2023 RAB Lighting All Rights Reserved Note: Specifications are subject to change at any time without notice

## Dimensions

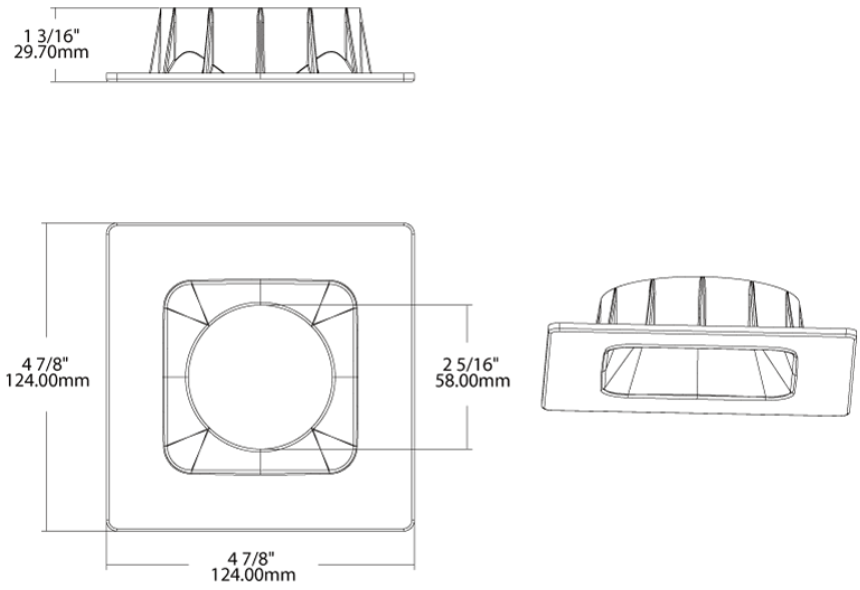



Copyright © 2023 RAB Lighting All Rights Reserved Note: Specifications are subject to change at any time without notice