HAT6SBW

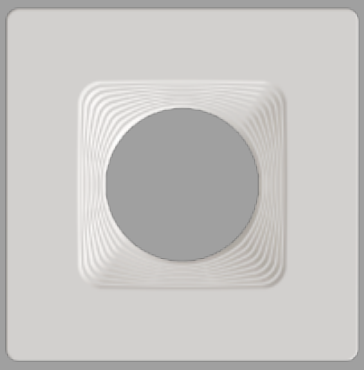

Color: White

Weight: 0.1 lbs

Project:	**Type:**
Prepared By:	**Date:**

Technical Specifications

Performance

Description:

6-inch square white baffle trim for HALED, see Trim Compatibility List

Product Type:

Recessed Downlights

Lumens:

5000K: 1,800 lm
4000K: 1,800 lm
3500K: 1,800 lm
3000K: 1,750 lm
2700K: 1,700 lm

Efficacy:

5000K: 100 Lm/W
4000K: 100 Lm/W
3500K: 100 Lm/W
3000K: 97 Lm/W
2700K: 94 Lm/W

Construction

Trim Component:

This component must be ordered with 6" HALED downlight module in order to make a complete fixture. See here for " 6" HALED module.

Material:

Metal

Trim Style:

Baffle

Shape:

Square

Other

Note:

All values are typical (tolerance +/- 10%)

Buy American Act Compliance:

RAB values USA manufacturing! Upon request, RAB may be able to manufacture this product to be compliant with the Buy American Act (BAA). Please contact customer service to request a quote for the product to be made BAA compliant.

Copyright © 2023 RAB Lighting All Rights Reserved Note: Specifications are subject to change at any time without notice

Dimensions

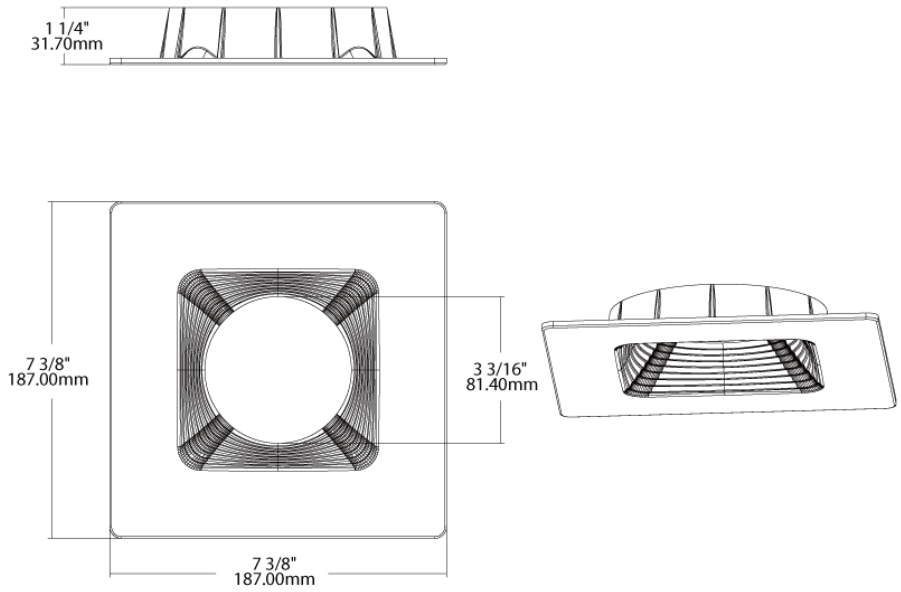

Copyright © 2023 RAB Lighting All Rights Reserved Note: Specifications are subject to change at any time without notice