R3-15

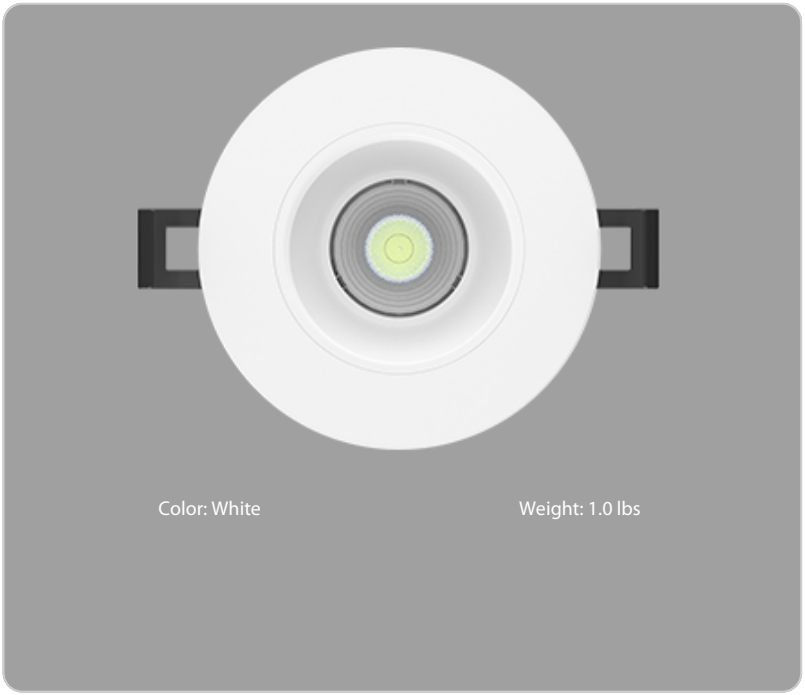

Color: White

Weight: 1.0 lbs

Project:	**Type:**
Prepared By:	**Date:**

Driver Info

Type	Constant Current
120V	0.12A
208V	N/A
240V	N/A
277V	N/A
Input Watts	15W

LED Info

Watts	15W
Color Temp	CCT Adjustable 2700K/3000K/3500K/4000K/5000K
Color Accuracy	90 CRI
L70 Lifespan	50,000 Hours
Lumens	1,000 lm
Efficacy	66.67

Technical Specifications

Performance

Product Type:
Recessed Downlights

Description:
Remote driver downlights are great for new construction and retrofit applications. Downlights provide small-aperture aesthetic, available in recessed, deep recessed and gimbal models in 2", 3", and 4" sizes.

Wattage Equivalency:
125W Incandescent

Input Wattage:
15W

Lumens:
2700K @ 987lm; 3000K @ 1,070lm; 3500K @ 1,146lm; 4000K @ 1,181lm; 5000K @ 1,176lm

Efficacy:
2700K @ 69lm/W; 3000K @ 77lm/W: 3500K @ 85lm/W; 4000K @ 86lm/W; 5000K @ 83lm/W

L70 Lifespan:
50,000-Hour LED lifespan based on IES LM-70 results

Electrical

Driver:
Constant Current, Class 2, 60 Hz, 120V 0.12A

THD:
≤25%

Power Factor:
≥0.9

Dimmable:
Yes, dims down to 10% on compatible TRIAC/ELV systems. See Dimmer Compatibility List on rablighting.com.

Input Voltage:
120V

Operating Frequency:
60 Hz

Input Current @ 120V (mA):
125mA

Operating Temperature:
-13°C to 104°F (-25°C to 40°C)

MBCP:
2,270

Flicker:
≤30%

Beam Angle:
38°±5°

LED Characteristics

Color Temperature:
Field adjustable via dip switch
2700K/3000K/3500K/4000K/5000K

Color Accuracy (CRI):
>90 CRI

R9 Value:
High color performance with R9 greater than or equal to 50

Color Consistency:
4-step MacAdam Ellipse binning to achieve consistent fixture-to-fixture color

Color Stability:
LED color temperature is warrantied to shift no more than 200K in color temperature over a 5-year period

Color Uniformity:
RAB's range of Correlated Color Temperature follows the guidelines of the American National Standard for Specifications for the Chromaticity of Solid State Lighting (SSL) Products, ANSI C78.377-2017.

Copyright © 2024 RAB Lighting All Rights Reserved Note: Specifications are subject to change at any time without notice

Technical Specifications (continued)

Installation

Mounting:
Recessed, no housing required

Construction

Size:
3"

Shape:
Round

Finish:
White

Enclosure Material:
Metal

Trim Style:
Smooth

Lens:
Polycarbonate light diffuser distributes light evenly and smoothly for general lighting applications

Listings:
ETL Listed

Air Tight:
Housing certified Air Tight as per ASTM E283

Compliance

Environment:
Suitable for use in dry, damp, and wet environments.

IC Rated:
Suitable for direct contact with insulation. Type IC inherently protected, suitable for direct contact to air permeable insulation and cULus listed for damp locations. Not for use in direct contact with spray foam insulation, consult NEMA LSD57-2013.

Energy Star Approved:
This product is ENERGY STAR® Version 2.2 Certified.

Energy Star ID:
2571992

Certification Model Number:
DLR0138(R3-15)

T20 Compliant:
No, this product does not meet California Title 20 requirements.

California Title 24 JA8 Compliant:
Can be used to conform with the requirements of California Title 24 Part 6

California Energy Commission (CEC) Status:
Lawful for Sales in California

NEC Compliant:
Suitable for use in closets. Compliant with NEC Sec. 410.16 (A)(1) and 410.16 (C3).

IESNA LM-79 & LM-80 Testing:
RAB LED luminaires and LED components have been tested by an independent laboratory in accordance with IESNA LM-79 and LM-80.

RoHS:
Mercury and UV free. RoHS-compliant components.

FCC:
Complies with Part 15B of the FCC Rules

Other

Warranty:
RAB warrants that our LED products will be free from defects in materials and workmanship for a period of five (5) years from the date of delivery to the end user, including coverage of light output, color stability, driver performance and fixture finish. RAB's warranty is subject to all terms and conditions found at rablighting.com/warranty.

Note:
All values are typical (tolerance +/- 10%)

Buy American Act Compliance:
RAB values USA manufacturing! Upon request, RAB may be able to manufacture this product to be compliant with the Buy American Act (BAA). Please contact customer service to request a quote for the product to be made BAA compliant.

Copyright © 2024 RAB Lighting All Rights Reserved Note: Specifications are subject to change at any time without notice

Dimensions

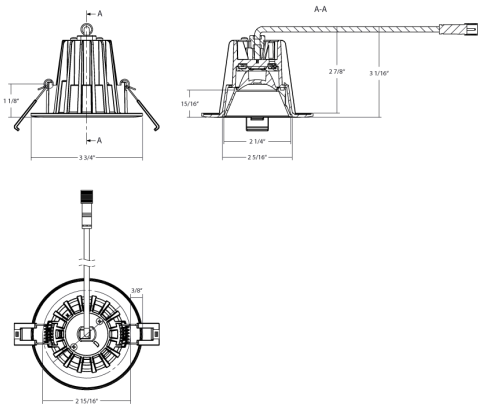

Features

- L5 color temperatures in 1 SKU (2700K, 3000K, 3500K, 4000K, 5000K)
- Deep regress remote driver downlight
- No recessed housing or J-box required
- New construction or retrofit applications
- Spring loaded retention clips

Ordering Matrix

Family	Size	Shape	Wattage	Beam Angle	CRI/Color Temp	Voltage	Finish	Trim
R	3		15					
	3 = 3"	**Blank =** Round **S =** Square	**9 =** 9W **15 =** 15W	**Blank =** 38°	**Blank =** 90CRI, 2700K/3000K/3500K/4000K/5000K Adjustable	**Blank =** 120V	**Blank =** White	**Blank =** Smooth **B =** Baffle

Copyright © 2024 RAB Lighting All Rights Reserved Note: Specifications are subject to change at any time without notice