DAISY50



Color: White

Weight: 1.7 lbs

Project:	Type:
Prepared By:	Date:

Technical Specifications

Performance

Product Type:
Daisy Wafer Accessories

Description:
Fifty foot extension cable with connectors for the daisy wafer downlights.

Construction

Finish:
White

Compliance

Energy Star Approved:
No

T20 Compliant:
Not applicable

California Title 24 JA8 Compliant:
Not applicable

California Energy Commission (CEC) Status:
Lawful for Sales in California

NEC Compliant:
Suitable for use in closets. Compliant with NEC Sec. 410.16 (A)(1) and 410.16 (C3).

IESNA LM-79 & LM-80 Testing:
RAB LED luminaires and LED components have been tested by an independent laboratory in accordance with IESNA LM-79 and LM-80.

RoHS Compliant:
Mercury and UV free. RoHS-compliant components.

FCC:
Complies with Part 15B of the FCC Rules

Other

Compatible Products:
DAISYKIT4
DAISYKIT4B
4" daisy wafer kit
DAISYKIT6
DAISYKIT6B
6" daisy wafer kit
DAISY4
DAISY4B
4" daisy wafer
DAISY6
DAISY6B
6" daisy wafer

Warranty:
RAB warrants that our LED products will be free from defects in materials and workmanship for a period of five (5) years from the date of delivery to the end user, including coverage of light output, color stability, driver performance and fixture finish. RAB's warranty is subject to all terms and conditions found at rablighting.com/warranty.

Copyright © 2024 RAB Lighting All Rights Reserved Note: Specifications are subject to change at any time without notice

Technical Specifications (continued)

Note:
All values are typical (tolerance +/- 10%)

Buy American Act Compliance:
RAB values USA manufacturing! Upon request, RAB may be able to manufacture this product to be compliant with the Buy American Act (BAA). Please contact customer service to request a quote for the product to be made BAA compliant.

Dimensions

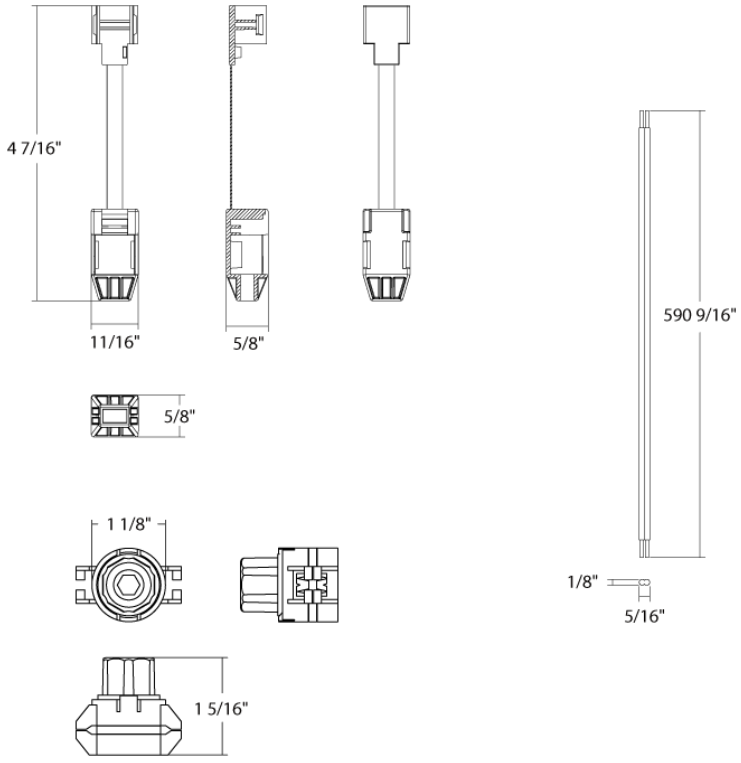

Copyright © 2024 RAB Lighting All Rights Reserved Note: Specifications are subject to change at any time without notice