DLTRIM/R4RB-BRZ-L



Color: Bronze

Weight: 0.1 lbs

Project:	Type:
Prepared By:	Date:

Technical Specifications

Performance

Product Type:
Retrofit Color Trim

Description:
4-inch round black baffle trim for retrofit and commercial downlights. See Trim Compatibility List.

Installation

Mounting:
Snap on

Construction

Size:
4"

Shape:
Round

Finish:
Bronze

Housing Material:
Metal

Trim Style:
Baffle

UV Protection:
No

Compliance

Listings:
None

Environment:
Suitable for use in dry and damp environments. Not suitable for applications with direct sunlight.

T20 Compliant:
Not compliant

California Title 24 JA8 Compliant:
Not Compliant

California Energy Commission (CEC) Status:
Lawful for Sales in California

Other

Compatible Products:
Compatible with select 4-inch Retrofit Downlights and Commercial Downlights, see complete Trim Compatibility List.

Buy American Act Compliance:
RAB values USA manufacturing! Upon request, RAB may be able to manufacture this product to be compliant with the Buy American Act (BAA). Please contact customer service to request a quote for the product to be made BAA compliant.

Copyright © 2024 RAB Lighting All Rights Reserved Note: Specifications are subject to change at any time without notice

Dimensions

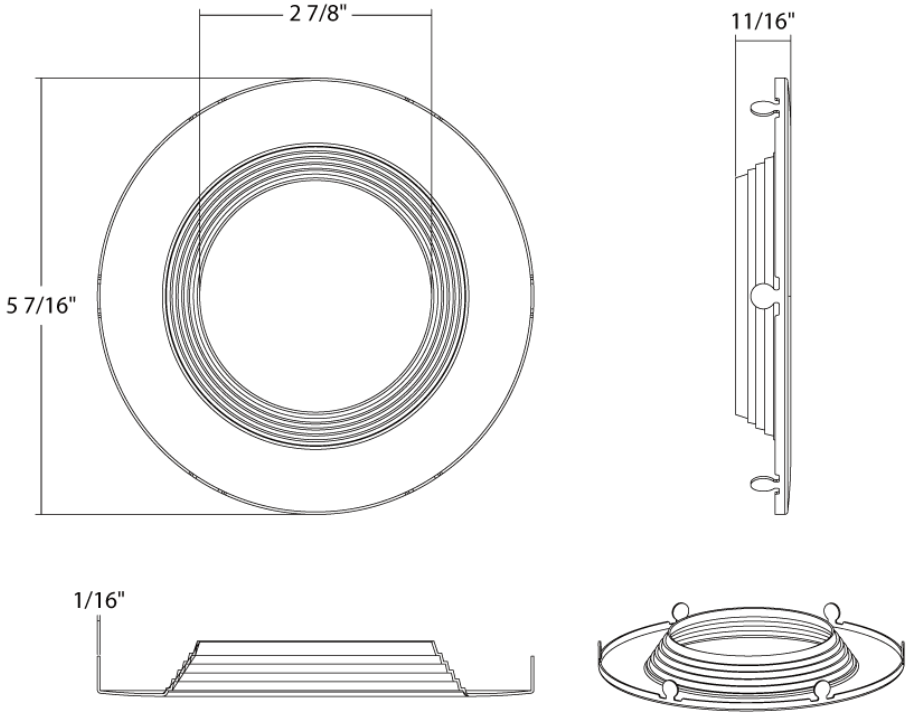

Copyright © 2024 RAB Lighting All Rights Reserved Note: Specifications are subject to change at any time without notice