INSTRUCTIONS
ALED® POST TOP INSTALLATION

RAB Lighting is committed to creating high-quality, affordable, well-designed and energy-efficient LED lighting and controls that make it easy for electricians to install and end users to save energy. We'd love to hear your comments. Please call the Marketing Department at 888-RAB-1000 or email: marketing@rablighting.com



IMPORTANT

READ CAREFULLY BEFORE INSTALLING FIXTURE. RETAIN THESE INSTRUCTIONS FOR FUTURE REFERENCE.
RAB fixtures must be wired in accordance with the National Electrical Code and all applicable local codes. Proper grounding is required for safety. THIS PRODUCT MUST BE INSTALLED IN ACCORDANCE WITH THE APPLICABLE INSTALLATION CODE BY A PERSON FAMILIAR WITH THE CONSTRUCTION AND OPERATION OF THE PRODUCT AND THE HAZARDS INVOLVED.
WARNING: Make certain power is OFF before installing or maintaining fixture. No user serviceable parts inside.

FIXTURE ASSEMBLY

1. Feed **Housing** wires *(3)* through one of the three **Rods**.
2. Clip the **Rods** *(3)* onto the **Housing**. Be sure the **Housing** clips are properly engaged onto the **Rods**.
3. Feed Fixture wires through the **Tenon Pole Adaptor**.
4. Slide **Tenon Pole Adaptor** on three **Rods**. Be sure the notches face the inside of the **Tenon Pole Adaptor**.
5. Tighten the **Set Screws** *(3)* at the **Tenon Pole Adaptor** to secure **Rods**.
6. For 3" tenon use shorter tenon **Set Screw 5/8"** and for 2-3/8" tenon use **ALED Sleeve** and hardware to secure the **Housing** to tenon.

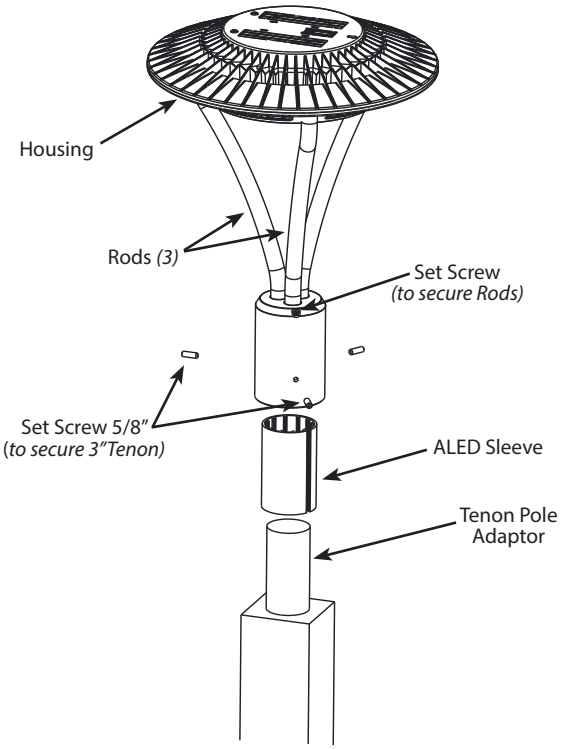

POLE MOUNTING

1. Make the wiring connections with UL approved connectors, knot the wires for strain relief.
2. **Tenon Pole Adaptor** can fit tenon with 3" or 2 3/8" diameter. Use **ALED Sleeve** if necessary for better fit.

ON/OFF WIRING

Universal voltage driver permits operation at 120V thru 277V, 50 or 60 Hz, except fixtures factory ordered with 480V twistlock photocell *(/PCT4)*. Units ordered with (/480) suffix are 480V.

1. Connect the black fixture lead to the (+) **LINE** supply lead.
2. Connect the white fixture lead to the (-) **COMMON** supply lead.
3. Connect the **GROUND** wire from fixture to supply **GROUND**.

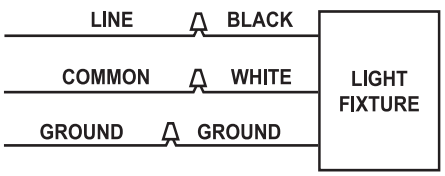

INSTRUCTIONS
ALED® POST TOP INSTALLATION

RAB Lighting is committed to creating high-quality, affordable, well-designed and energy-efficient LED lighting and controls that make it easy for electricians to install and end users to save energy. We'd love to hear your comments. Please call the Marketing Department at 888-RAB-1000 or email: marketing@rablighting.com

0-10V DIMMABLE WIRING

Universal voltage driver permits operation at 120V thru 277V, 50 or 60 Hz. 0-10V control wires must be rated for 300V minimum. For 0-10V Dimming, follow the wiring directions as shown below.

1. Connect the black fixture lead to the (+) **LINE** supply lead.
2. Connect the white fixture lead to the (-) **COMMON** supply lead.
3. Connect the **GROUND** wire from fixture to supply ground. Do NOT connect the **GROUND** of the dimming fixture to the output.
4. Connect the purple fixture lead to the (V+) DIM lead.
5. Connect the pink *(or gray)* fixture lead to the (V-) DIM lead.
6. Cap the yellow fixture lead, if present. Do NOT connect.

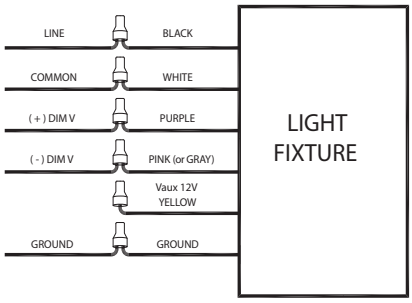

CLEANING & MAINTENANCE

CAUTION: Be sure fixture temperature is cool enough to touch. Do not clean or maintain while fixture is energized.

1. Clean glass lens with non-abrasive glass cleaning solution.
2. Do not open the fixture to clean the LED. Do not touch the LED.

TROUBLESHOOTING

1. Check that the line voltage at the fixture is correct. Refer to wiring directions.
2. Is the fixture grounded properly?

Note: *These instructions do not cover all details or variations in equipment nor do they provide for every possible situation during installation, operation or maintenance.*

© 2021 RAB LIGHTING Inc.

ALED5T - IN - 1121
73172-RAB

Easy Answers

rablighting.com
Visit our website for product info

Tech Help Line
Call our experts: 888 722-1000

e-mail
Answered promptly - sales@rablighting.com

Free Lighting Layouts
Answered online or by request

RAB WARRANTY: *RAB's warranty is subject to all terms and conditions found at rablighting.com/warranty.*