ALED5T26YK



High output LED pole top area light with IES type V circular distribution. Wide and uniform 360 degree pattern ideal for large outdoor areas such as parking lots, corporate parks, and retail settings.

Color: Black

Weight: 21.8 lbs

Project:	**Type:**
Prepared By:	**Date:**

Driver Info

Type	Constant Current
120V	0.22A
208V	0.13A
240V	0.11A
277V	0.10A
Input Watts	26.4W

LED Info

Watts	26W
Color Temp	3000K (Warm)
Color Accuracy	70 CRI
L70 Lifespan	100,000 Hours
Lumens	3,395 lm
Efficacy	128.6 lm/W

Technical Specifications

Compliance

UL Listed:
Suitable for wet locations

IESNA LM-79 & LM-80 Testing:
RAB LED luminaires and LED components have been tested by an independent laboratory in accordance with IESNA LM-79 and LM-80.

DLC Listed:
This product is on the Design Lights Consortium (DLC) Qualified Products List and is eligible for rebates from DLC Member Utilities. Designed to meet DLC 5.1 requirements.
DLC Product Code: PQRGZYS5

LED Characteristics

LEDs:
High-output, long-life LEDs

Color Consistency:
7-step MacAdam Ellipse binning to achieve consistent fixture-to-fixture color

Color Stability:
LED color temperature is warrantied to shift no more than 200K in color temperature over a 5-year period

Color Uniformity:
RAB's range of Correlated Color Temperature follows the guidelines of the American National Standard for Specifications for the Chromaticity of Solid State Lighting (SSL) Products, ANSI C78.377-2017.

Performance

Lifespan:
100,000-Hour LED lifespan based on IES LM-80 results and TM-21 calculations

Wattage Equivalency:
Equivalent to 100W Metal Halide

Construction

Cold Weather Starting:
The minimum starting temperature is -40°F (-40°C)

Maximum Ambient Temperature:
Suitable for use in up to 104°F (40°C)

Effective Projected Area:
EPA = 1.2

Thermal Management:
Superior thermal management with external air-flow fins

Housing:
Precision die-cast aluminum, Type V distribution

Support Arms:
Extruded aluminum

Lens:
Clear tempered glass lens

Reflector:
Specular vacuum-metallized polycarbonate, Type V distribution

Gaskets:
High-temperature silicone

Finish:
Formulated for high durability and long-lasting color

Green Technology:
Mercury and UV free. RoHS-compliant components.

Optical

BUG Rating:
B2 U0 G1

Other

Patents:
The designs of the ALED5T52 are protected by patents pending in US, Canada, China, Taiwan and Mexico

Copyright © 2025 RAB Lighting All Rights Reserved Note: Specifications are subject to change at any time without notice

ALED5T26YK

Technical Specifications (continued)

5-Year, No-Compromise Warranty:
RAB warrants that our LED products will be free from defects in materials and workmanship for a period of five (5) years from the date of delivery to the end user, including coverage of light output, color stability, driver performance and fixture finish. RAB's warranty is subject to all terms and conditions found at rablighting.com/warranty.

Electrical

Drivers:
Constant Current, Class 2 with 6kV surge protection, 120-277VAC, 50/60 Hz, 120V: 0.22A, 208V: 0.13A, 240V: 0.11A, 277V: 0.10A

THD:
5.67% at 120V, 6.72% at 277V

Power Factor:
99.6% at 120V, 96.4% at 277V

Dimensions

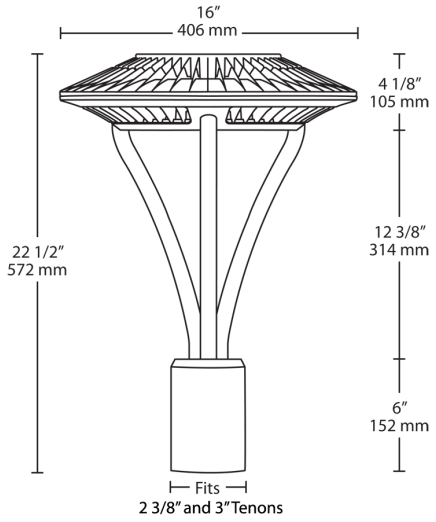

Features

- IES type V (circular) distribution
- 100,000-hour LED lifespan
- Compatible with standard 2 3/8" and 3" tenons
- "Air-Flow" fins for maximum heat dissipation
- 5-Year, No-Compromise Warranty

Copyright © 2025 RAB Lighting All Rights Reserved Note: Specifications are subject to change at any time without notice